DRAWING NO
MP24549

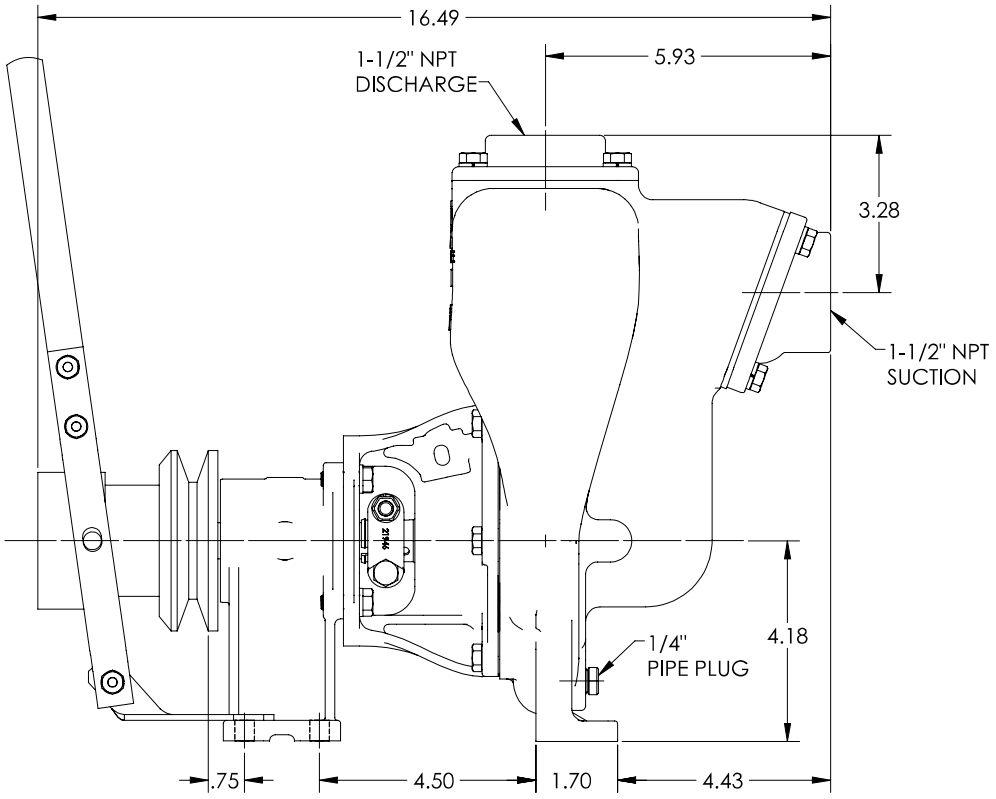

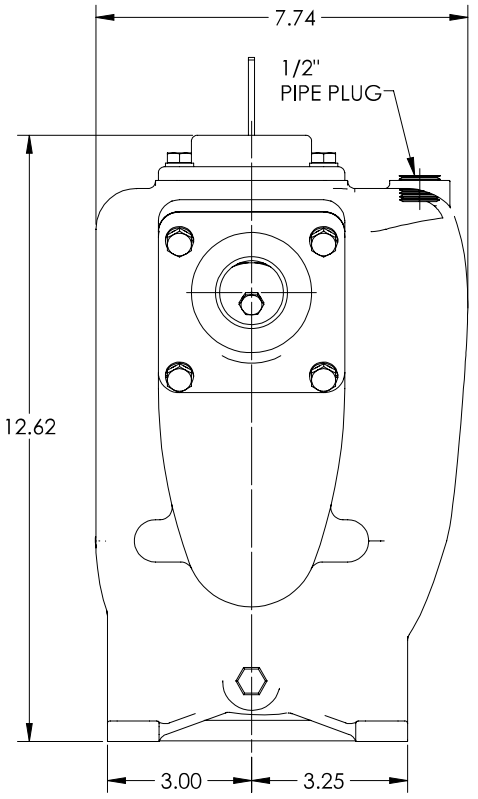

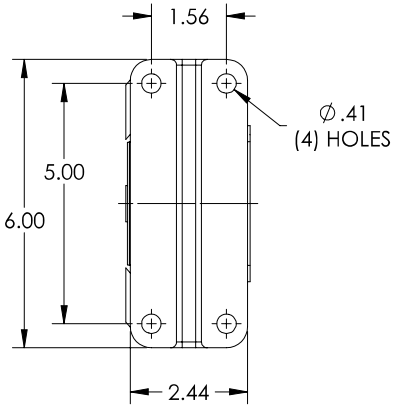

REV	DESCRIPTION	DRAWN	DATE	EN
G				
F				
E	UPDATED DWG ECN 1135159	SF	8/7/20	SF
D	CHG'D CLUTCH ECN# 888	-	6/23/04	-
C	WAS 22375 PED ASSY	-	5/31/78	-
B	REDRAWN	-	3/31/76	-
A	PART NUMBERS ADDED	-	10/1/71	-

UNLESS OTHERWISE NOTED
THIRD ANGLE PROJECTION

2 PLACE DIM ± .020
3 PLACE DIM ± .010
ANGULAR DIM ± 1°

DO NOT SCALE

MP PUMPS, INC.
FRASER, MICHIGAN 48026, U.S.A.

MATERIAL: MATERIAL SPECS

DRAWN BY	DATE COMP.	APPROV.	SCALE	MADE FOR	MADE FROM
SF	8/7/20	SF			

NAME: FM5PMP C:PED/CL 5.0

DRAWING NO: MP24549

NOTE: THIS DRAWING OR PRINT, PROPERTY OF MP PUMPS INC., CONTAINS PROPRIETARY AND CONFIDENTIAL INFORMATION. IT SHALL BE USED ONLY AS APPROVED BY MP PUMPS AND SHALL NOT BE GIVEN TO OTHERS OR COPIED WITHOUT THE WRITTEN CONSENT OF MP PUMPS. RETURN TO MP PUMPS PROMPTLY WHEN REQUESTED.